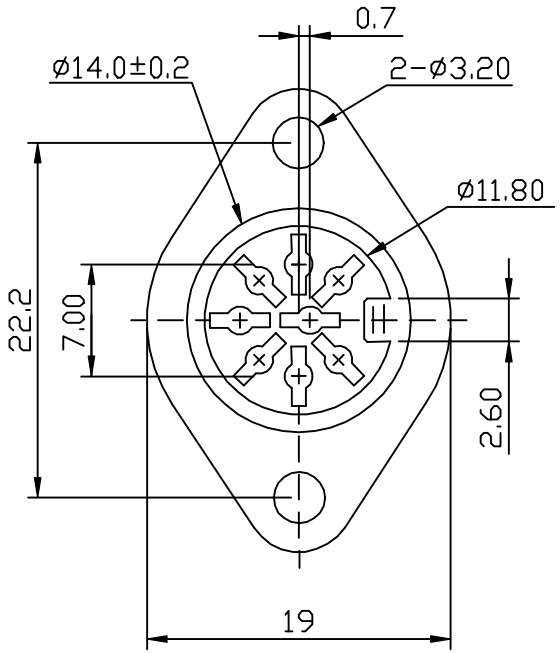

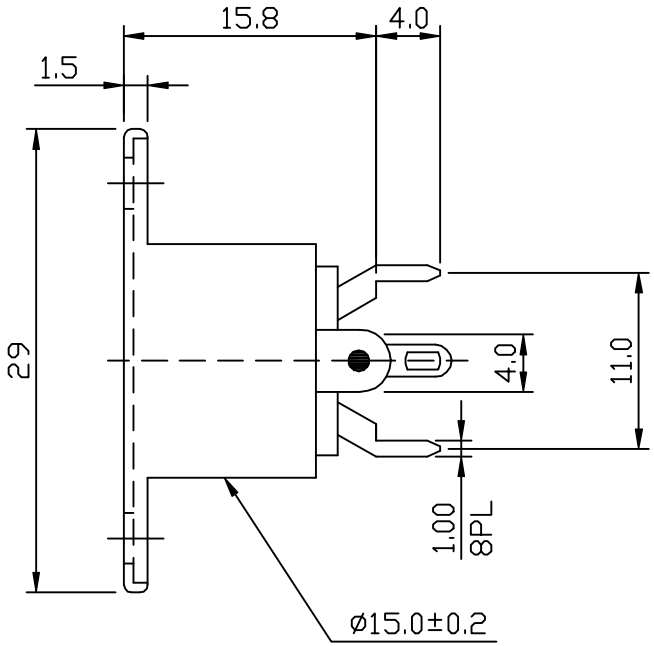

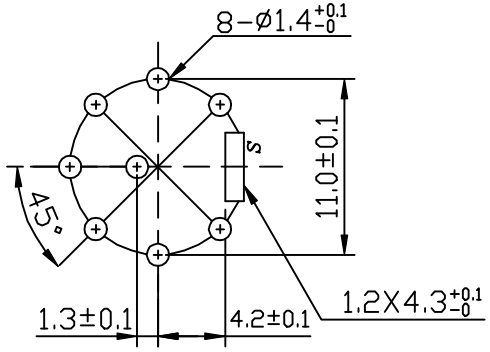

P.C.B LAYOUT(±0.1)
(BOTTOM VIEW)

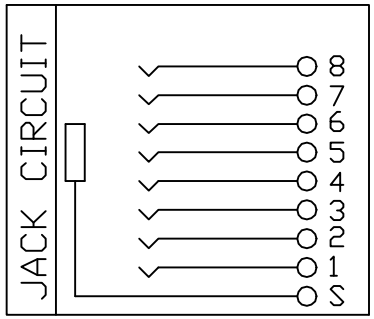

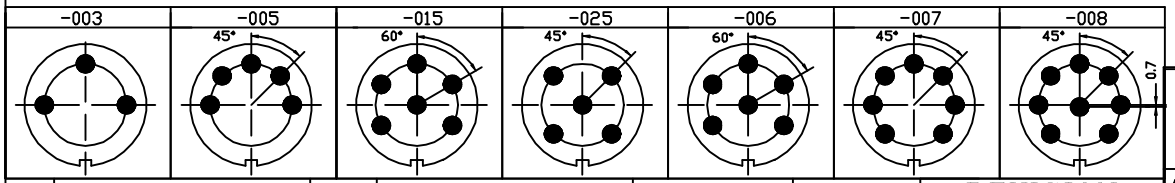

NO	PART NAME	Q'TY	MATERIAL	PLATED	COLOR
5					
4	MOUTH BUSHING	1	PBT-94V0		BLACK
3	COVER	1	IRON SHEET	NICKLE	
2	SLEEVE	1	P.B.S	SILVER	
1	CONTACT	8	BRASS	SILVER	

REVISION
2 (05/31/01')

SINGATRON ENTERPRISE CO., LTD. (U.S.A.)

TOLERANCE	PART NAME	DIN JACK (270°)
X. ±0.5 X.X ±0.3 X.XX ±0.15	PART NO.	LN-0505B-008

SCALE:2/1	UNIT	DATE	DRAW	CHECK	APPROVE
	M/M	10/12/88'	LEE WEN-CHENG	李文正	