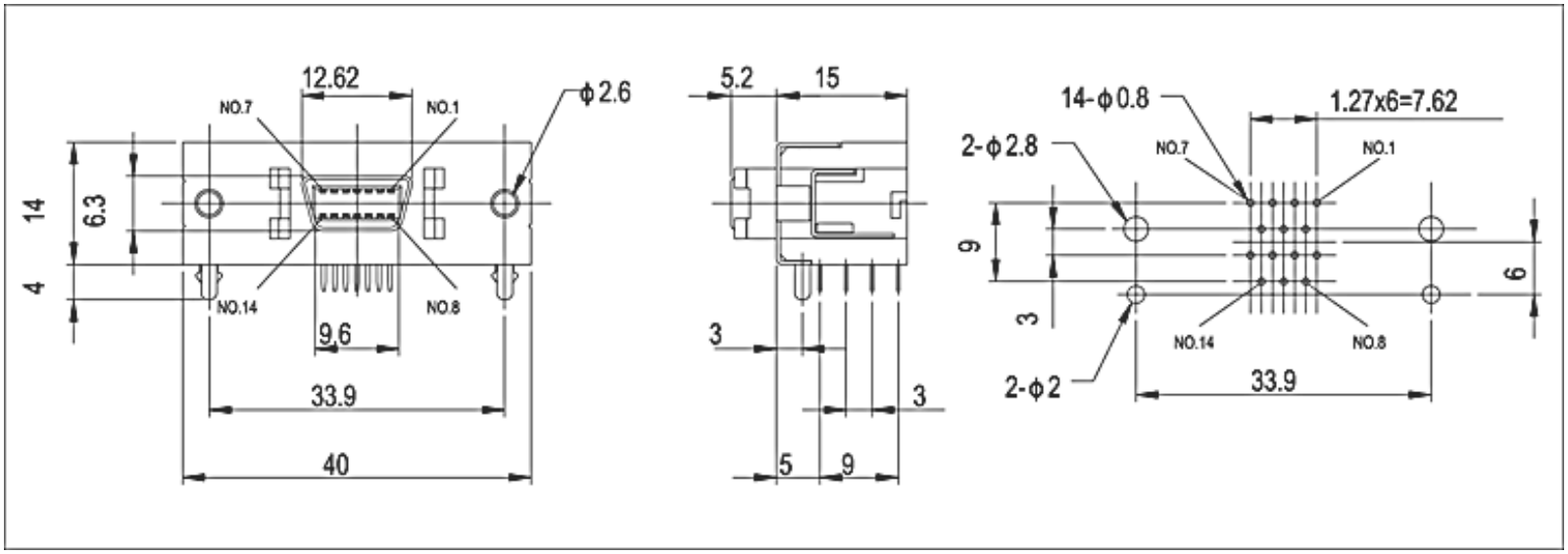PRODUCT' NO. KM16003