REVISIONS				
LTR	DESCRIPTION	DATE	REVISED	APPROVED

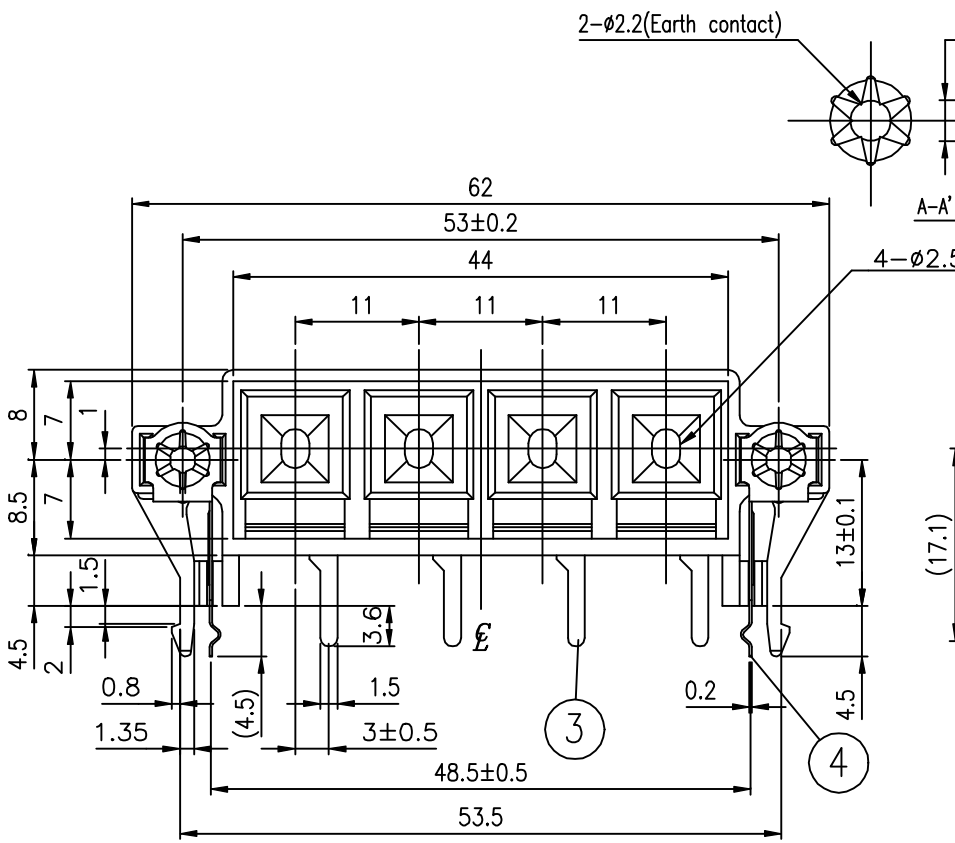

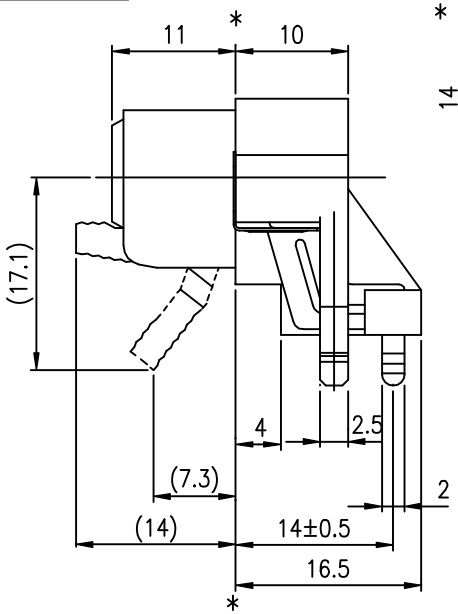

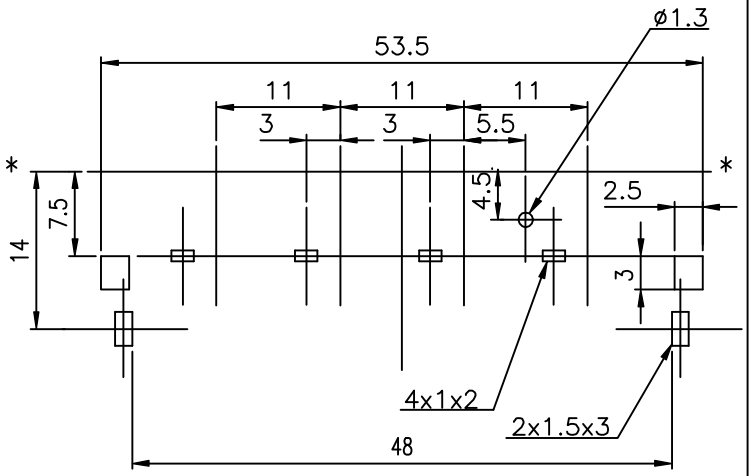

RECOMMENDED PANEL HOLE LAYOUT
(TOLERANCE : ±0.1)

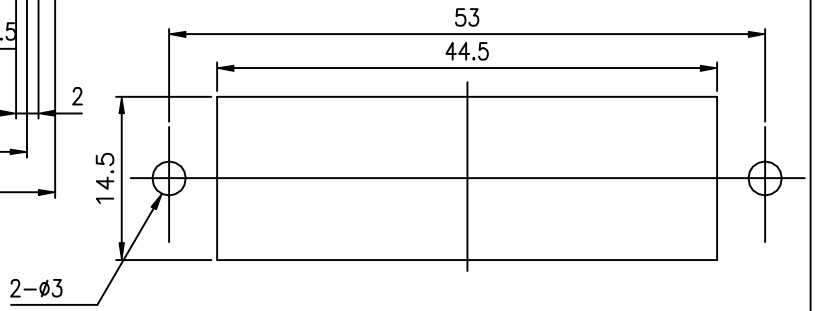

RECOMMENDED PANEL HOLE LAYOUT
(TOLERANCE : ±0.1)

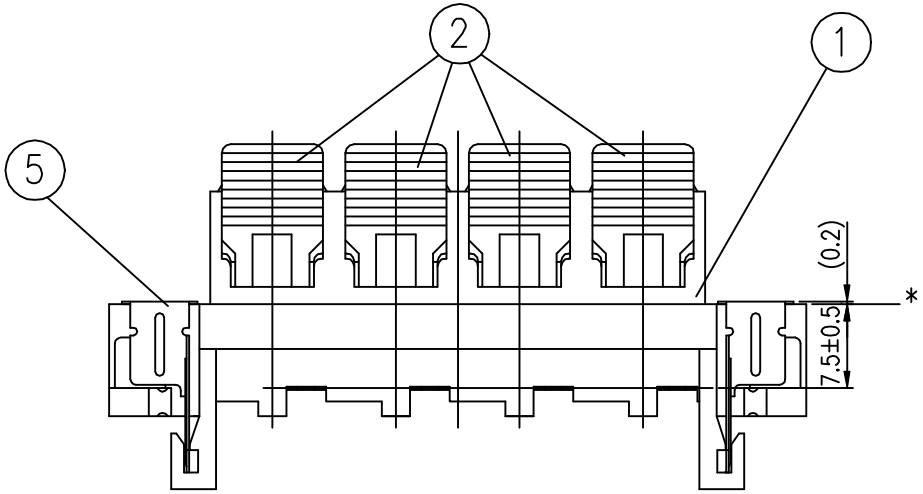

LTR	PART NAME	QTY	MATERIAL(THICK,COLOR)	REMARK
5	EARTH CONTACT(L)	1	C5191R-1/2H t=0.2	MB:Cu2μm Sn/Pb(90/10)3μm MIN
4	EARTH CONTACT(R)	1	C5191R-1/2H t=0.2	MB:Cu2μm Sn/Pb(90/10)3μm MIN
3	CONTACT SPRING	4	C5191R-EH t=0.3	MB:Cu2μm Sn/Pb(90/10)3μm MIN
2	PUSH PLATE	4	POM RESIN	94HB(M9031)
1	HOUSING	1	ABS RESIN (BLACK)	94HB

DSND	Brocken	DATE	FEB.15.95	SCALE 2/1	NAME PUSH TERMINAL BOARD
DWN		DATE		3RD ANGLE PROJECTION	
CHKD		DATE			CAT. NO. HSP-344V1
APVD		DATE		UNIT: mm	
SINGATRON ENTERPRISE CO., LTD. (U.S.A.)					DWN.NO. A-344V1

UNLESS OTHERWISE SPECIFIED, TOLERANCE ON DECIMAL: ±0.3 FRACTIONS: ANGLES: