REVISIONS				
LTR	DESCRIPTION	DATE	REVISED	APPROVED

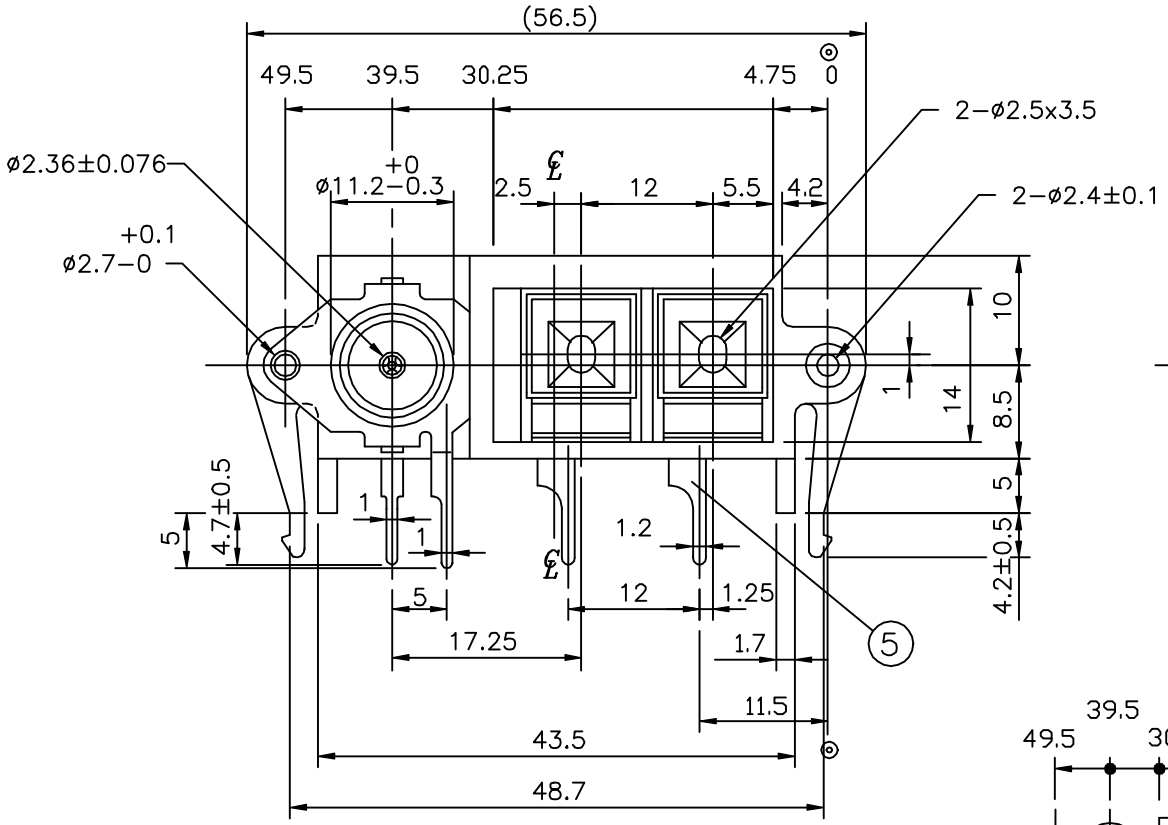

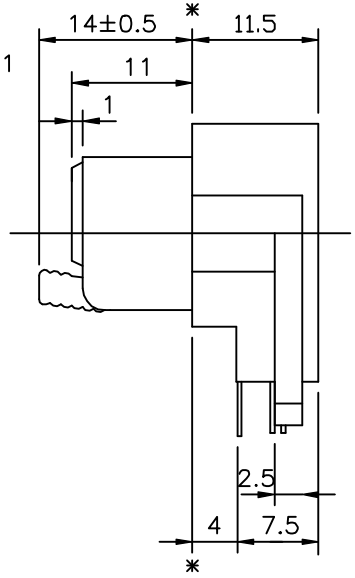

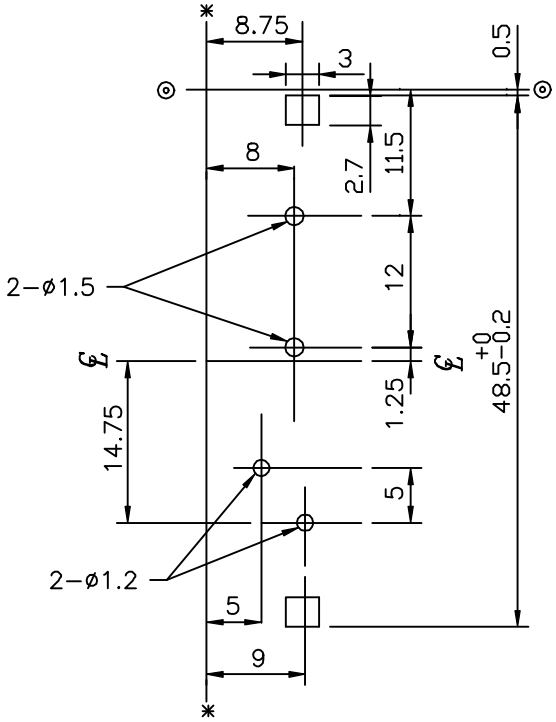

HOLE LAYOUT (BOTTOM VIEW)

TOLERANCE ±0.1

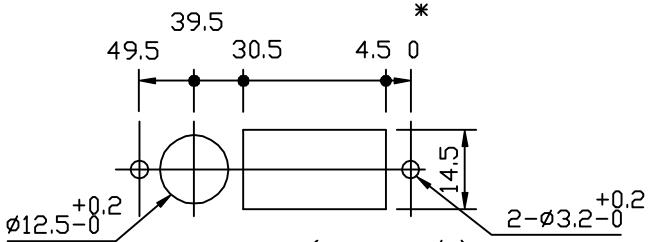

PANEL HOLE (SCALE 1/1)

TOLERANCE ±0.1

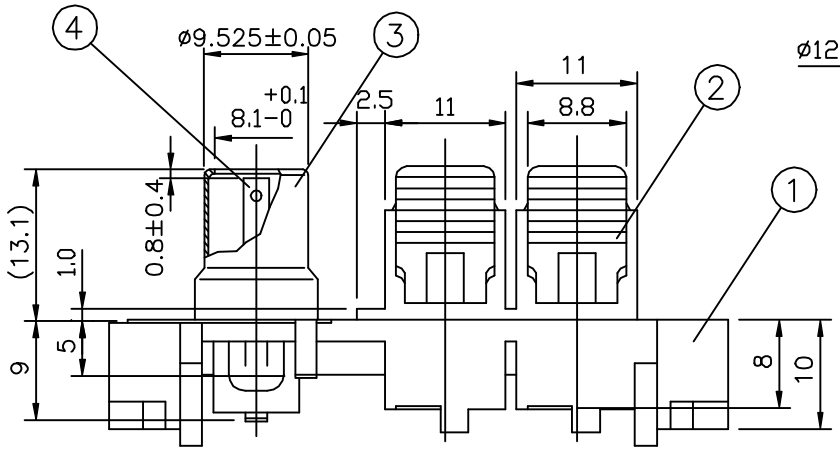

LTR	PART NAME	QTY	MATERIAL(THICK,COLOR)	FINISH
5	SPRING	1	C5191R-EH ; t=0.3	PB-SN PLATED
4	PIN	1	C5191R-H ; t=0.3	PB-SN PLATED
3	BUSHING	1	C2680R-0 ; t=0.4	NI-PLATED
2	PUSH PLATE	2	POM	POLYPLASTICS M90#
1	HOUSING	1	ABS 94HB (BLACK)	

DWN		DATE		SCALE 2/1	NAME PUSH TERMINAL BOARD
DSND		DATE		3RD ANGLE PROJECTION	
CHKD		DATE			CAT. NO. HSP-312V2
APVD		DATE		UNIT: mm	

SINGATRON ENTERPRISE CO., LTD. (U.S.A.)

DWN.NO. A-312V2

UNLESS OTHERWISE SPECIFIED, TOLERANCE ON DECIMAL: ±0.3 FRACTIONS: ANGLES: ±5°