| REVISIONS | | | | |
|---|---|---|---|---|
| LTR | DESCRIPTION | DATE | REVISED | APPROVED |
| | | | | |

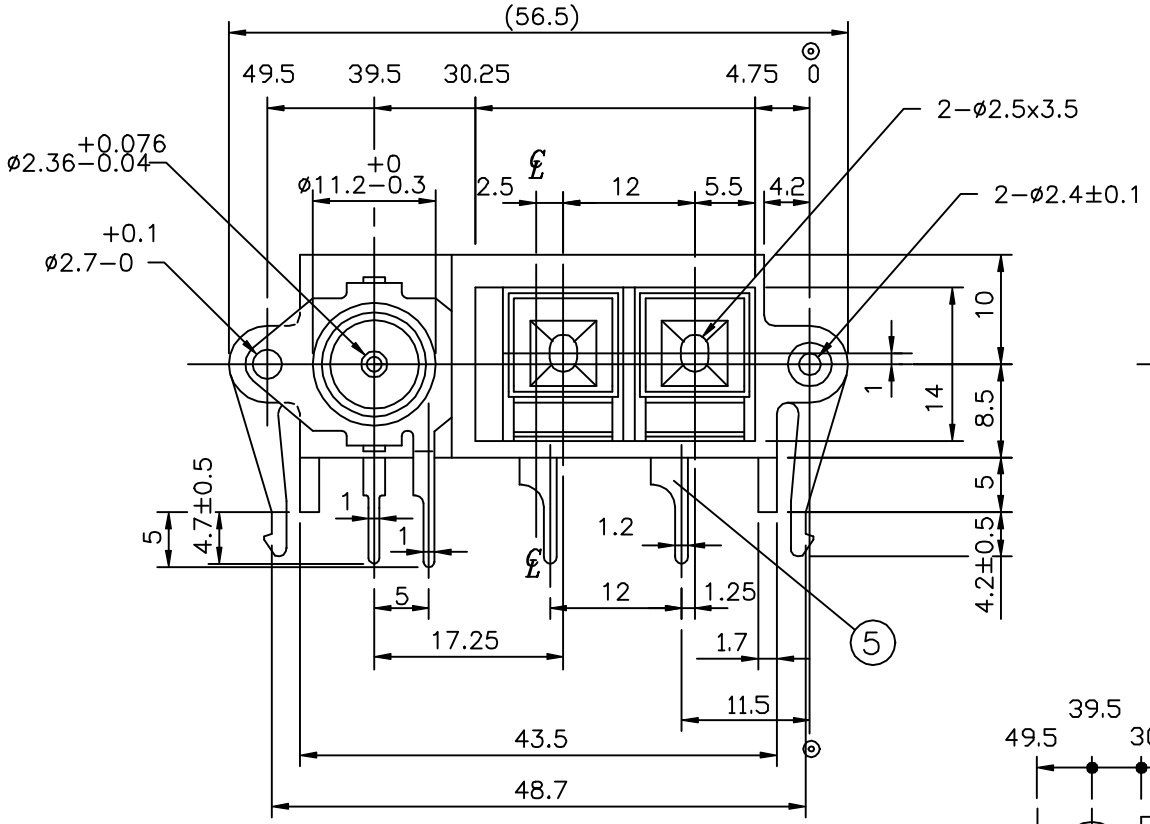


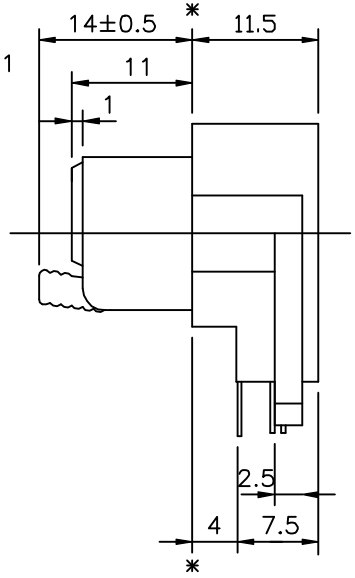


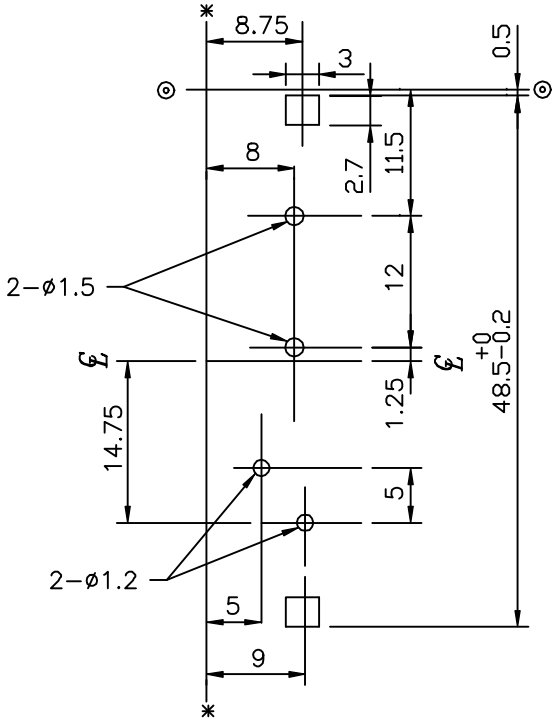


HOLE LAYOUT (BOTTOM VIEW)

TOLERANCE ±0.1

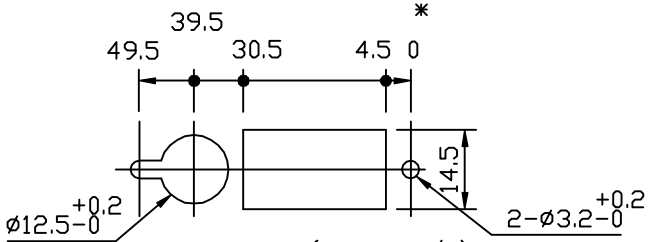


PANEL HOLE (SCALE 1/1)

TOLERANCE ±0.1

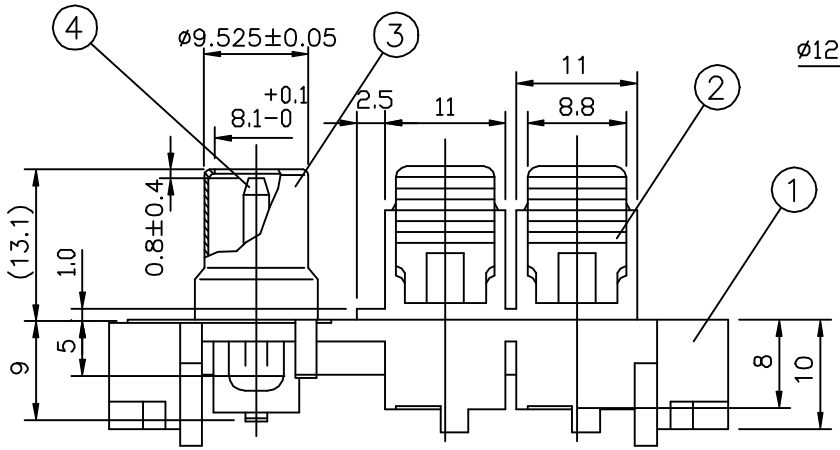


| | | | | |
|---|---|---|---|---|
| 5 | SPRING | 1 | C5191R-EH ; t=0.3 | PB-SN PLATED |
| 4 | PIN | 1 | C5191R-H ; t=0.3 | NI-PLATED |
| 3 | BUSHING | 1 | C2680R-0 ; t=0.4 | NI-PLATED |
| 2 | PUSH PLATE | 2 | POM | POLYPLASTICS M90# |
| 1 | HOUSING | 1 | ABS 94HB (BLACK) | CHI MEI PA-717C |
| LTR | PART NAME | QTY | MATERIAL(THICK,COLOR) | FINISH |

| | | | | | |
|---|---|---|---|---|---|
| DWN | | DATE | | SCALE 2/1 | NAME PUSH TERMINAL BOARD |
| DSND | Y.H.KUNG | DATE | 1993.06.18 | 3RD ANGLE PROJECTION | |
| CHKD | | DATE | | | CAT. NO. HSP-312V |
| APVD | | DATE | | UNIT: mm | |
| SINGATRON ENTERPRISE CO., LTD. (U.S.A.) | | | | | DWN.NO. A-312V |

UNLESS OTHERWISE SPECIFIED, TOLERANCE ON DECIMAL: ±0.3 FRACTIONS: ANGLES: ±5°