REVISIONS				
LTR	DESCRIPTION	DATE	REVISED	APPROVED

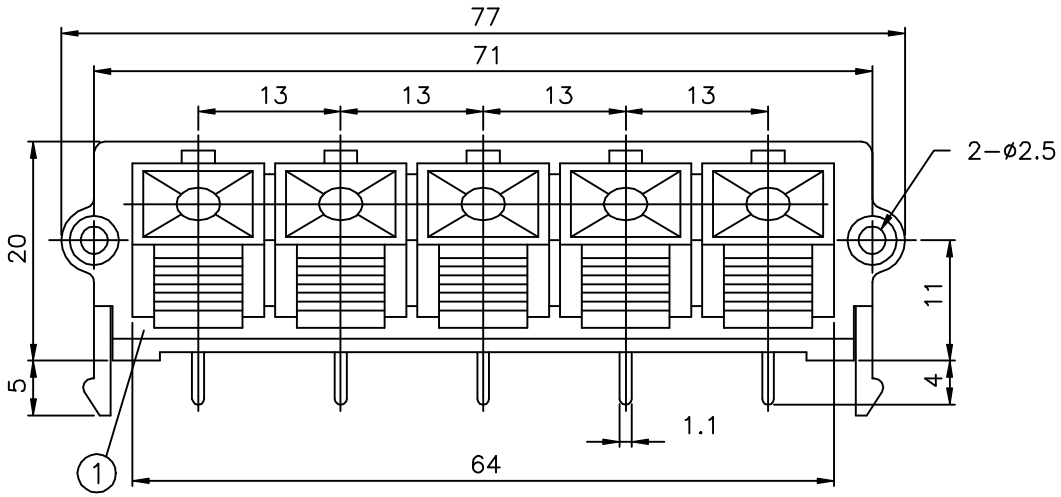

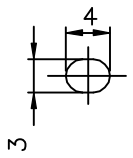

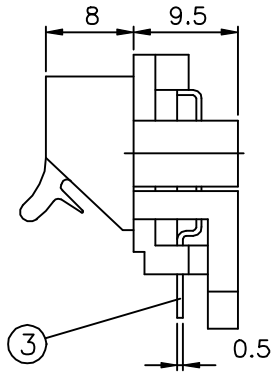

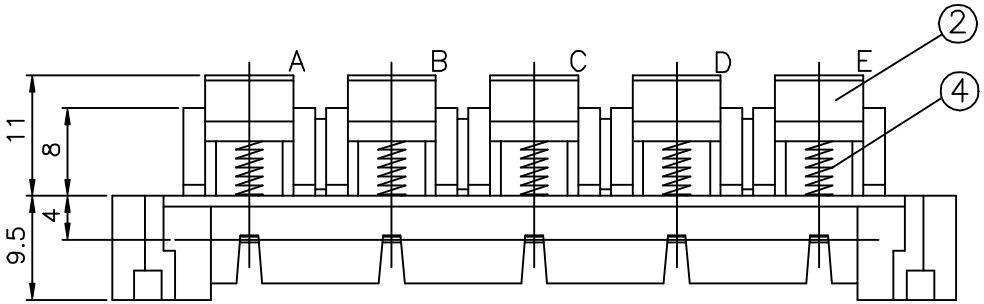

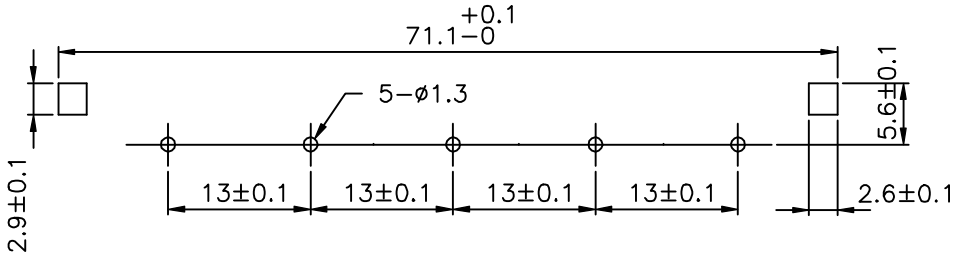

4	SPRING	5	SWC		
3	CONTACT	5	C2680R t=0.5	PB−SN−PLATED	
2	PUSH PLATE	5	ABS 94HB	CHI MEI IND CO,LTD PA−717C	
1	HOUSING	1	ABS 94HB	CHI MEI IND CO,LTD PA−717C	
LTR	PART NAME	QTY	MATERIAL(THICK,COLOR)	REMARK	

DWN		DATE		SCALE 2/1	NAME PUSH TERMINAL BOARD
DSND	M.L.CHANG	DATE	1992.09.17	3RD ANGLE PROJECTION	
CHKD		DATE			CAT. NO. HSP−105V
APVD		DATE		UNIT: mm	
SINGATRON ENTERPRISE CO., LTD. (U.S.A.)					DWN.NO. A−105V

UNLESS OTHERWISE SPECIFIED, TOLERANCE ON DECIMAL: ±0.3 FRACTIONS: ANGLES: