REVISIONS				
LTR	DESCRIPTION	DATE	REVISED	APPROVED
⚠x4	加刻UL,CSA MARK及認證號碼	2001.05.21		

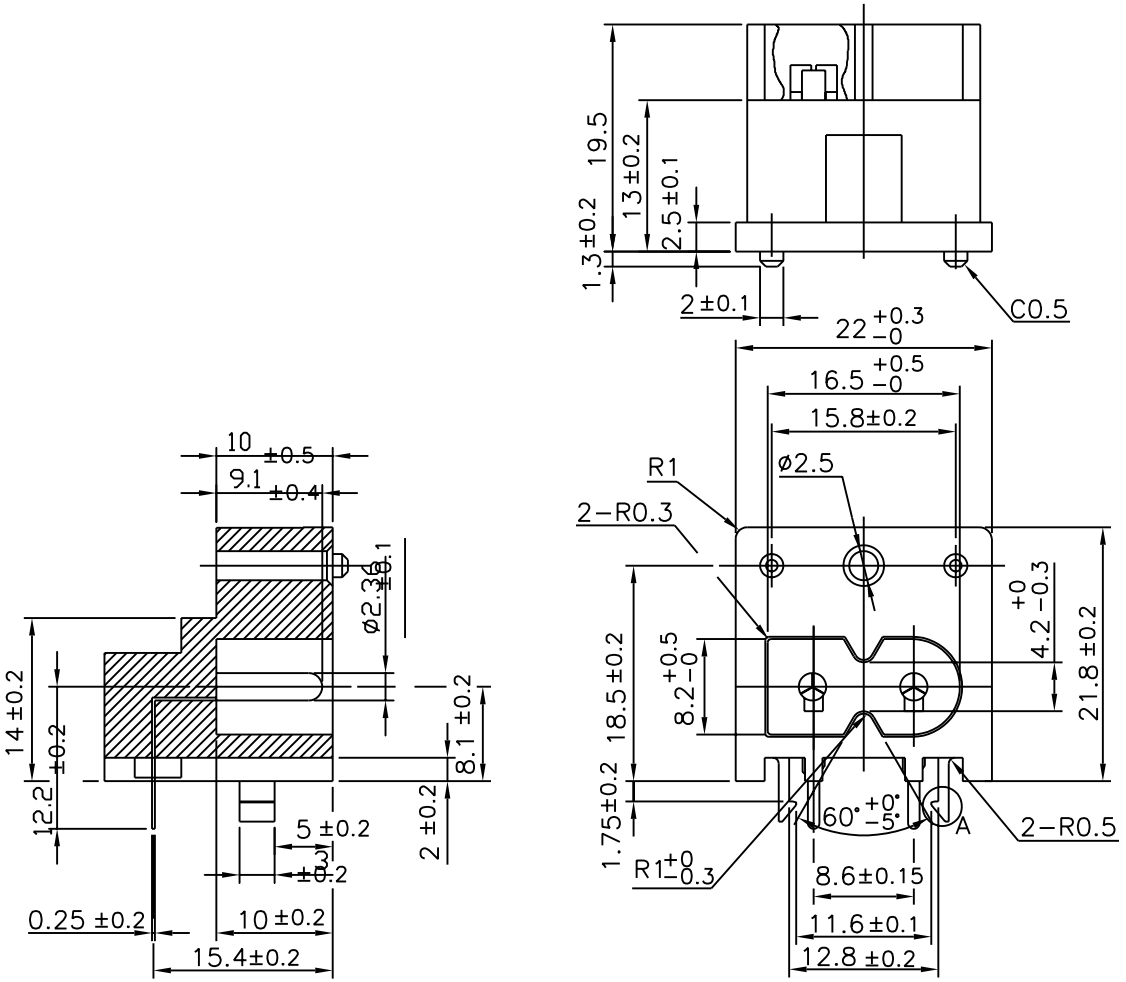

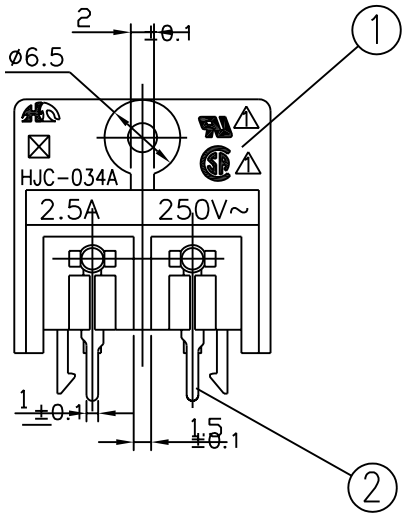

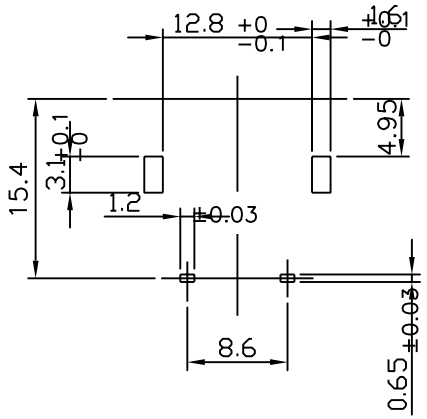

HOLE LAYOUT
BOTTOM VIEW
(TOLERANCE:±0.1)

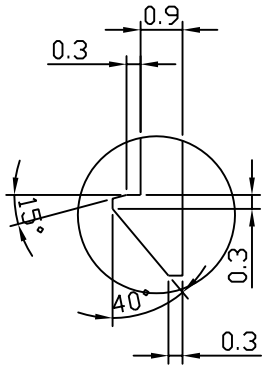

DETAIL A

⚠UL FILE NO. E95834
Note:Approved Standard:⚠CSA FILE NO. LR 80761

LTR	PART NAME	QTY	MATERIAL(THICK,COLOR)	REMARK
2	PIN	2	C2680−H t=0.25	MB:Cu Pb/Sn
1	HOUSING	1	NYLON66+15%GF (UL94V−0)	NAN YA 6410G3

DSND	TARRY	DATE	2001.02.23	SCALE 2/1	NAME AC POWER SOCKET
DWN		DATE		3RD ANGLE PROJECTION	
CHKD		DATE			CAT. NO. HJC−034A
APVD		DATE		UNIT: mm	
SINGATRON (USA)					DWN.NO. A−034A

UNLESS OTHERWISE SPECIFIED, TOLERANCE ON DECIMAL:±0.3 FRACTIONS: ANGLES:

002