REVISIONS				
LTR	DESCRIPTION	DATE	REVISED	APPROVED
1 x2	Added a Rib-wing in the bottom	97'01.17	Chung 1/17	Kung 1/20
2 x2	增加卡合緊度	97'03.04	CHRISTINA 3/4	Kung 3/4
3 x2	訂正材料厚度	97'03.04	CHRISTINA 3/4	Kung 3/4
4 x1	加刻SEMKO MARK	98'01.16	CHRISTINA 1/16	Kung 1/16
5 x3	加標公差 及指定R 角最大值			
6 x1	增加中心PIN 頂端之標註			

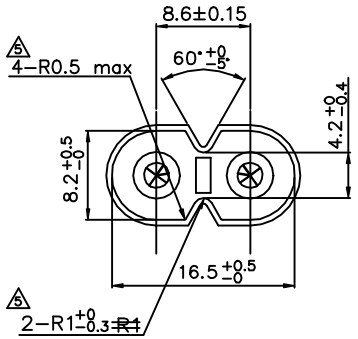

SCALE 2

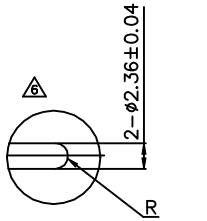

DETAL A 2:1

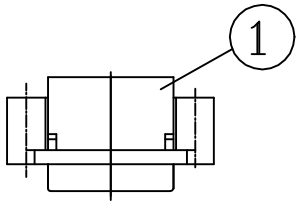

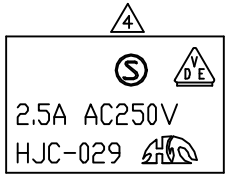

SCALE 2

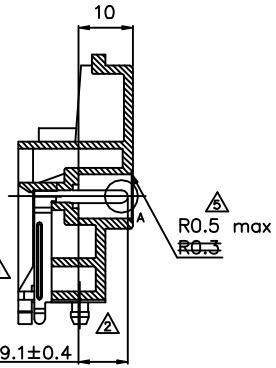

SECTION A-A

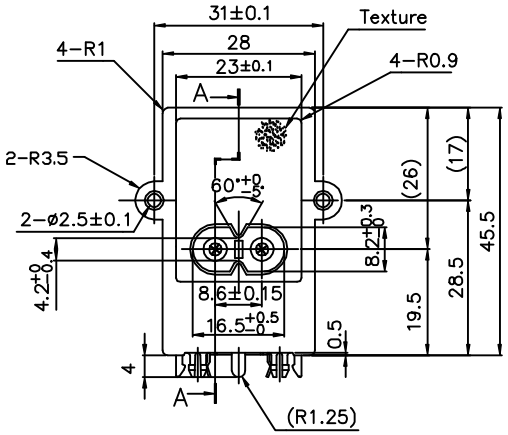

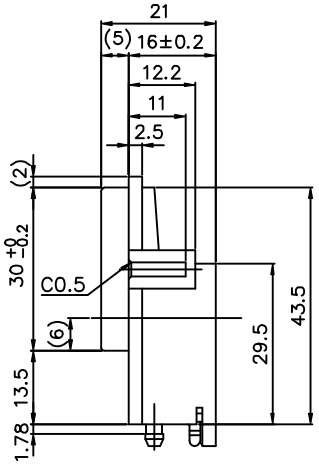

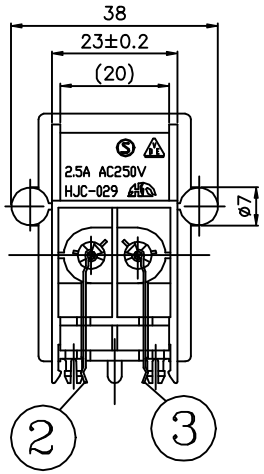

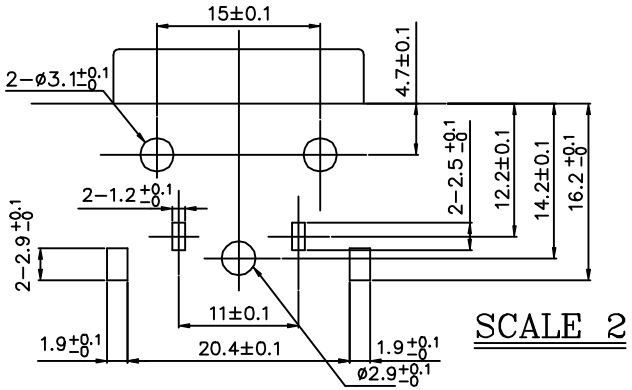

SCALE 2

HOLES LAYOUT
(BOTTOM VIEW)

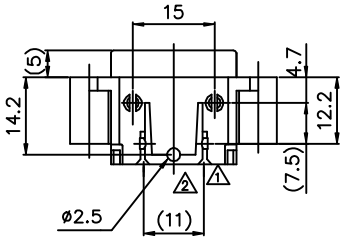

Note : Approved Standard : VDE FILE NO. : 15506-1550-1005
SEMKO REFERENCE NO. : 9752172/01

3	TERMINAL PIN-2	1	C2680 , t=0.4 3	MB:CU Sn/Pb PLATED
2	TERMINAL PIN-1	1	C2680 , t=0.4 3	MB:CU Sn/Pb PLATED
1	HOUSING	1	NORYL (BLACK)	GE , UL-94V-0
LTR	PART NAME	QTY	MATERIAL	REMARK

DSND	CHUNG	DATE	1995.09.18	SCALE 1/1	NAME AC POWER SOCKET
DWN	CHRISTINA	DATE	1995.09.18	3RD ANGLE PROJECTION	
CHKD		DATE			CAT. NO. HJC-029
APVD		DATE		UNIT: mm	
SINGATRON ENTERPRISE CO., LTD. (U.S.A.)					DWN.NO. A-029 002

UNLESS OTHERWISE SPECIFIED, TOLERANCE ON DECIMAL: ±0.3 FRACTIONS: ANGLES: