REVISIONS				
LTR	DESCRIPTION	DATE	REVISED	APPROVED
1 x1	修正刻字,原HJC028改為HJC-028	'97,10,17	CHRISTINA	JOHNSON
2 x1	修正圖面螺絲孔部份形狀	'00,08,11		

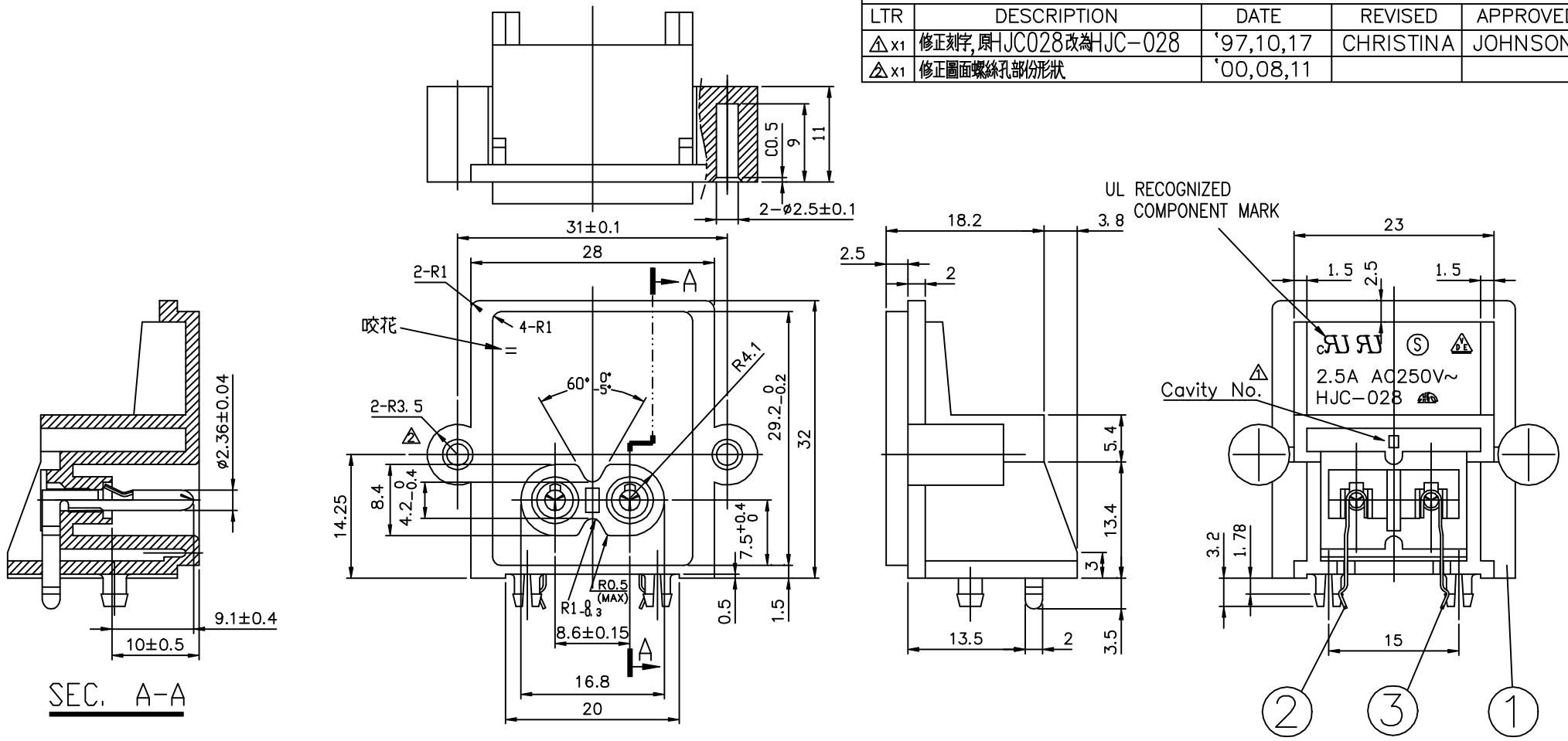

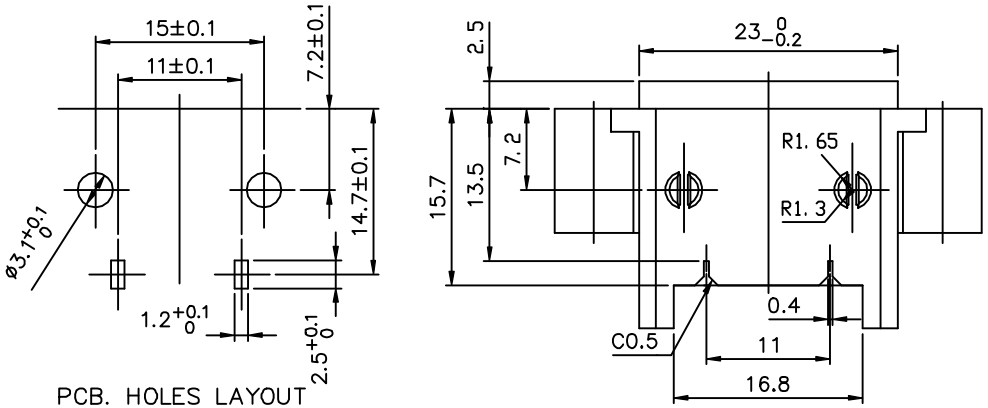

PCB. HOLES LAYOUT
T=1.6 mm

Note : Approved Standard : UL FILE No. E95834
cUL FILE No.E95834 PROJECT No. 95SC02818
SEMKO REFERENCE No. 9514011
VDE FILE No. 15506-1550-7004

LTR	PART NAME	QTY	MATERIAL(THICK,COLOR)	REMARK
3	PIN-2	1	C2680 ; t=0.3	MB:Cu Pb/Sn PLATED
2	PIN-1	1	C2680 ; t=0.3	MB:Cu Pb/Sn PLATED
1	HOUSING	1	PPO.(BLACK)	GE 1005

DSND	Brocken	DATE	'94-09-05	SCALE 2/1	NAME AC POWER SOCKET
DWN		DATE		3RD ANGLE PROJECTION	
CHKD		DATE			CAT. NO. HJC-028
APVD		DATE		UNIT: mm	

SINGATRON ENTERPRISE CO., LTD. (U.S.A.)

DWN.NO. A-028

002

UNLESS OTHERWISE SPECIFIED, TOLERANCE ON DECIMAL:±0.3 FRACTIONS: ANGLES: