1> 3 WIRING HOLEs WITH 0.4ø TO FIT 28 AWG WIRE
2> DIAMETER OF 28 AWG WIRE IS 0.3211mm

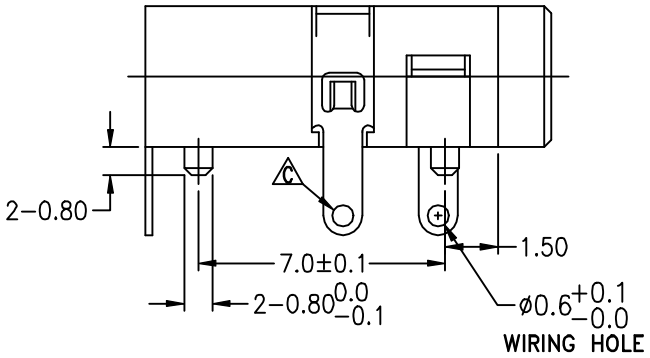

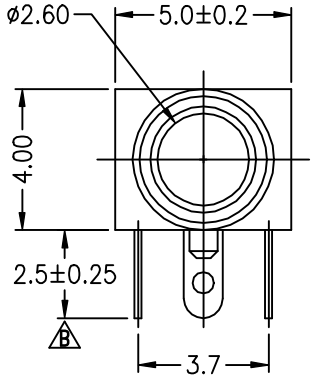

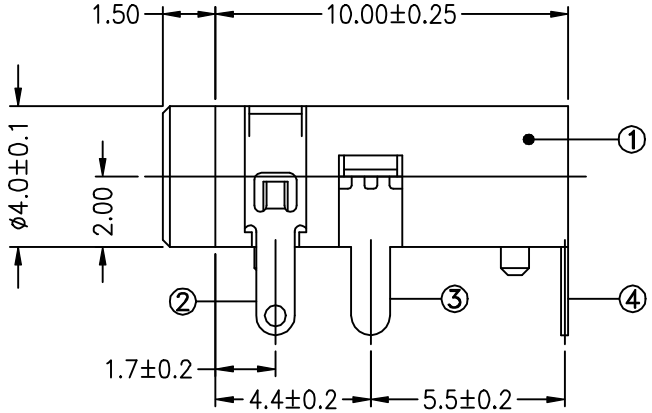

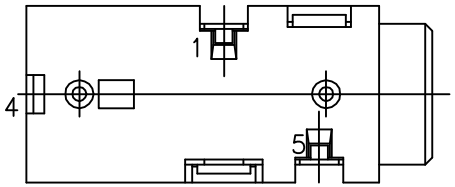

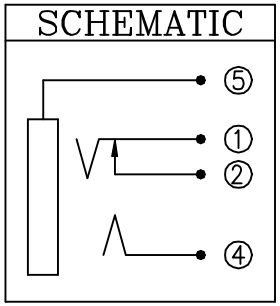

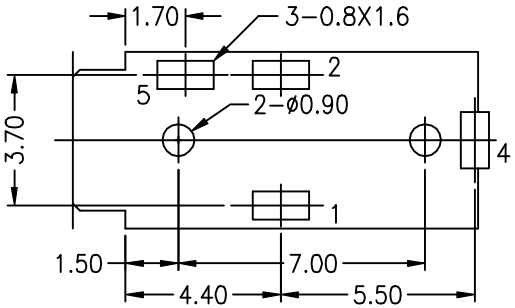

Recommended PCB Layout
[BOTTOM VIEW]

ITEM	PART NO.	NAME	MATERIAL	FINISH	Q'TY	NOTE
4	A406-M4	TIP CONTACT	PBS	TIN	1	20T
3	A406-M2	RING SHUNT	BRASS	TIN	1	25T
2	A406-M1	RING & GROUND	PBS	TIN	2	25T
1	A406-P1-6T	HOUSING	PA6T	15	1	UL94V-0

REV.	DESCRIPTIONs	DATE
D	CHANGE TO NEW PART	900515
C	WIRING HOLEs	890418
B	LENGTH OF LEADs TO 2.50mm<WAS 2.0mm>	880803

UNLESS OTHERWISE SPECIFIED DIMENSION ARE IN CENTIMETER TOLERANCE ARE FRACTION ± DECIMAL .X± .XX± .XXX± ANGLE± DO NOT SCALE DRAWING

SUNCATRON ENTERPRISE CO., LTD. (U.S.A.)

APPROVALS		DATE
DRAWN	Gary	2001/05/15
CHECKED	Bragg	2001/05/15
APPROVED	Richard	2001/05/15

SERIES AJ406/870122

TITLE 2.5ø EARPHONE JACK 1 SWITCH

SIZE A3 VERSION A DWG NO AJ406-4R

SCALE SHEET 1/1