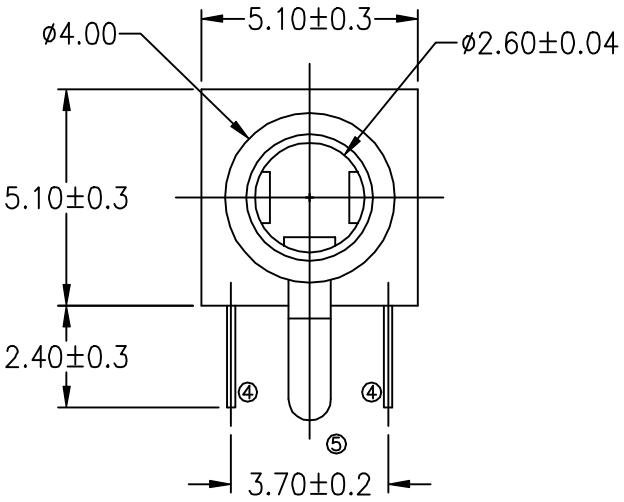

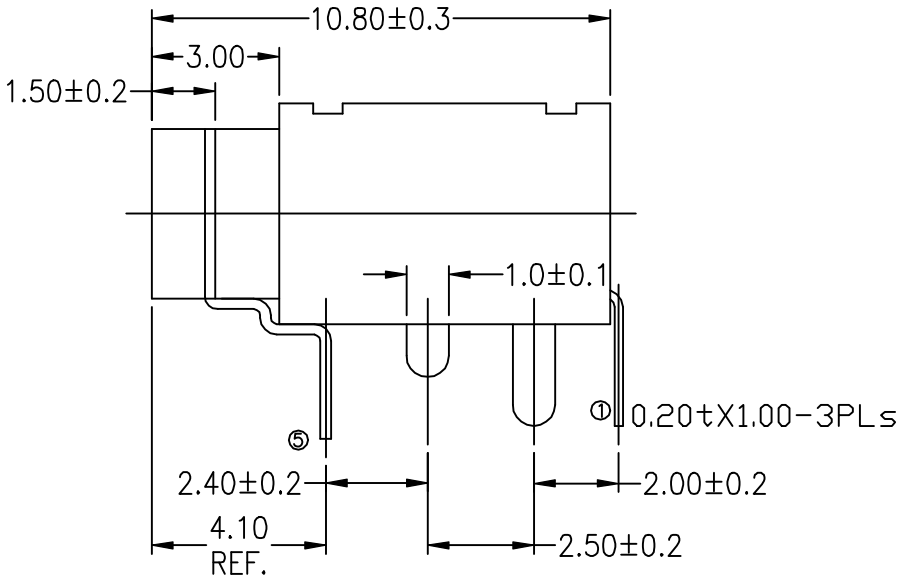

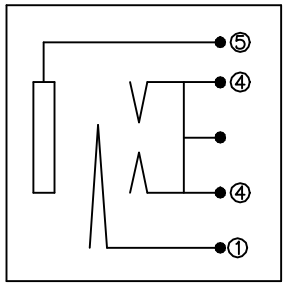

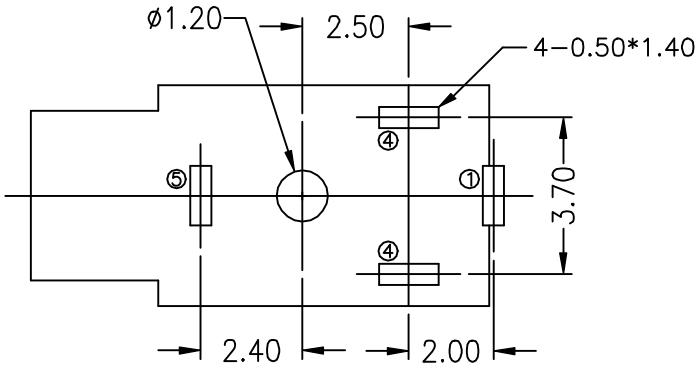

Recommended PCB Layout
[BOTTOM VIEW]

D	PCB LAYOUT CHANGE / TOLERANCE ADD ON	890412	TITLE	*2.5ø EARPHONE JACK / SPECIAL PART	APVD			PART	AJ402	SINGATRON ENTERPRISE CO., LTD. (U.S.A.)
C	PCB LAYOUT CHANGE	881102			CHKD			UNIT	mm	
REV.	DESCRIPTIONs	DATE			DWN	Richard	881102	FPD	88/11/02	