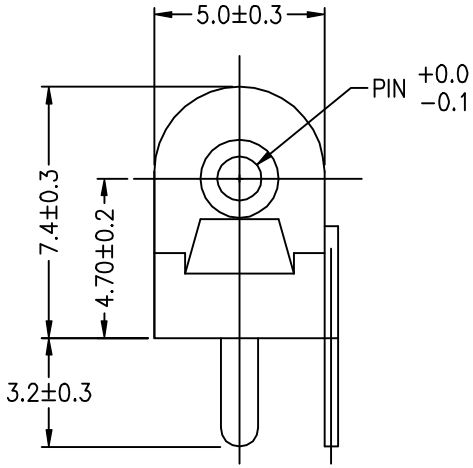

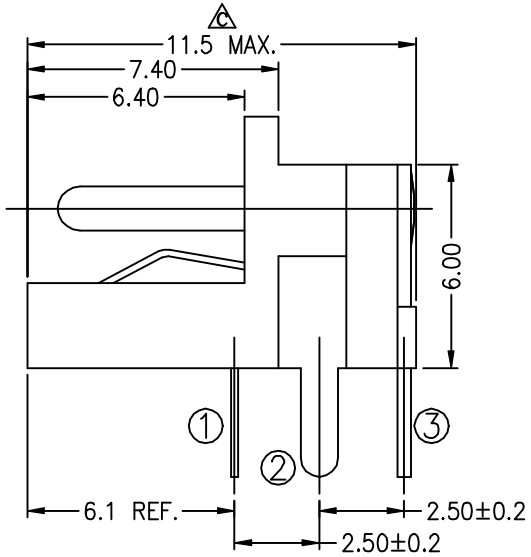

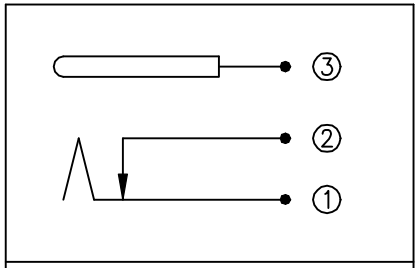

PIN DIA.	PART NO.
1.0mm	AJ219A
1.3mm	AJ219B

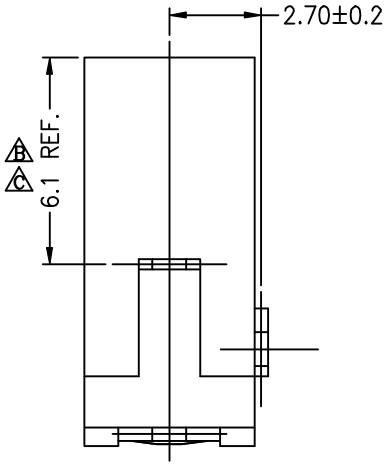

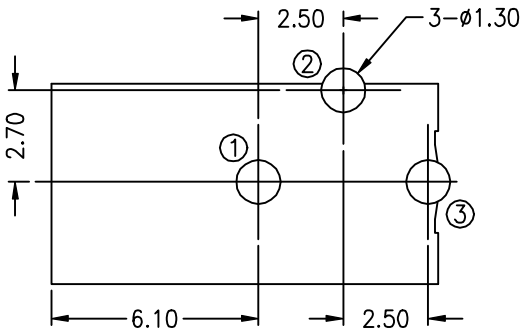

Recommended PCB Layout
[BOTTOM VIEW]

REV.	DESCRIPTIONs	DATE
C	WAS 6.2 REF. / TO 6.1 REF. CUSTOMER REQUESTED	900328
B	WAS 6.1 REF.	890411
A	RE−PUBLISHED	890225

TITLE: *MINIATURE DC POWER JACK / VERTICAL TYPE
*OPEN HOUSING

APVD	Richard	890225	PART	AJ219X
CHKD	Bragg	890225	UNIT	mm
DWN	Gary	890225	FPD	88/07/20

SINGATRON ENTERPRISE CO., LTD. (U.S.A.)